MARIN

BETTER SHIPS, BLUE OCEANS

MOSES

Autonomous docking of a feeder vessel

Bas J. de Kruif

Introduction - EU Moses project

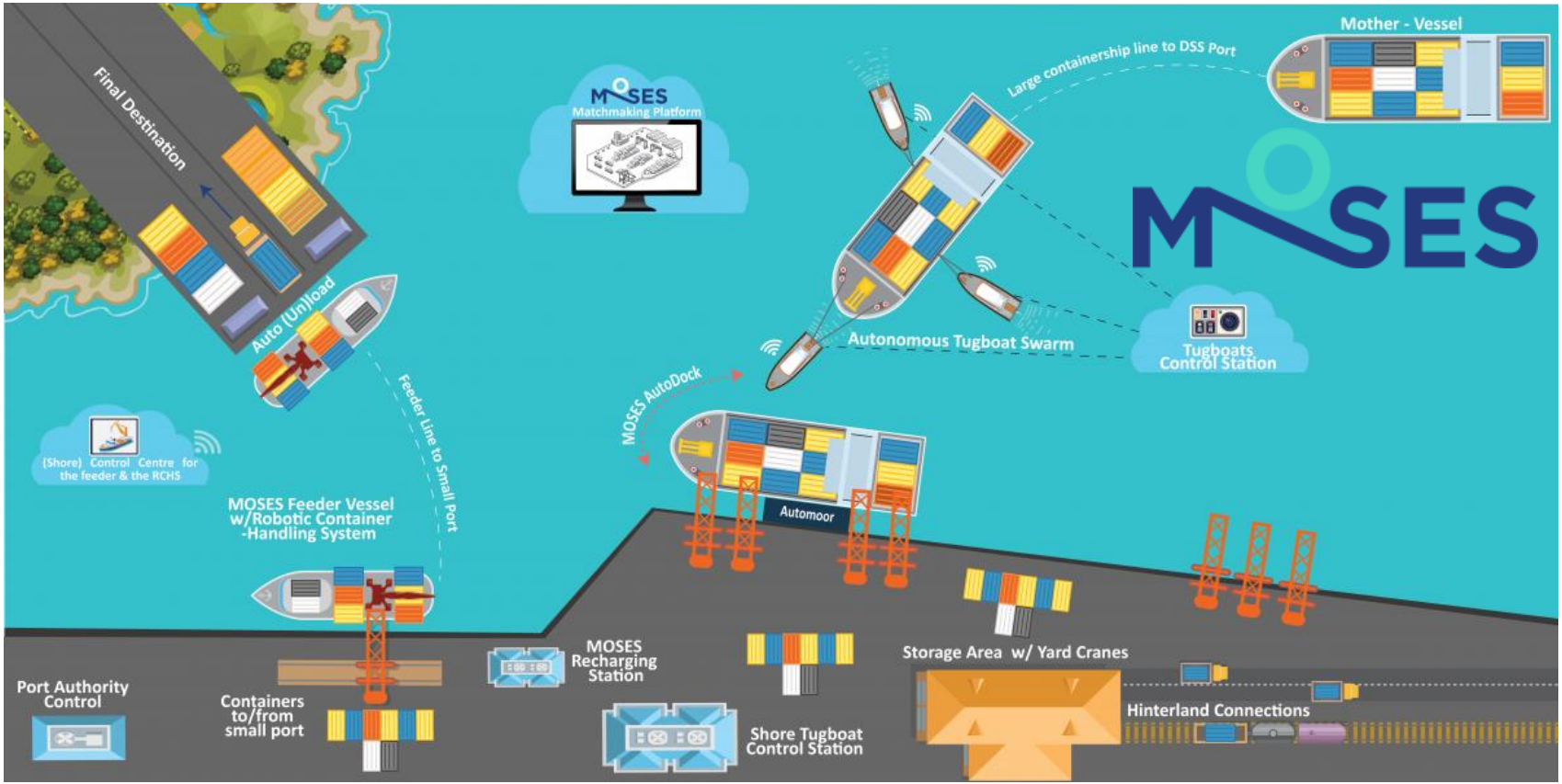

Introduction - EU Moses project

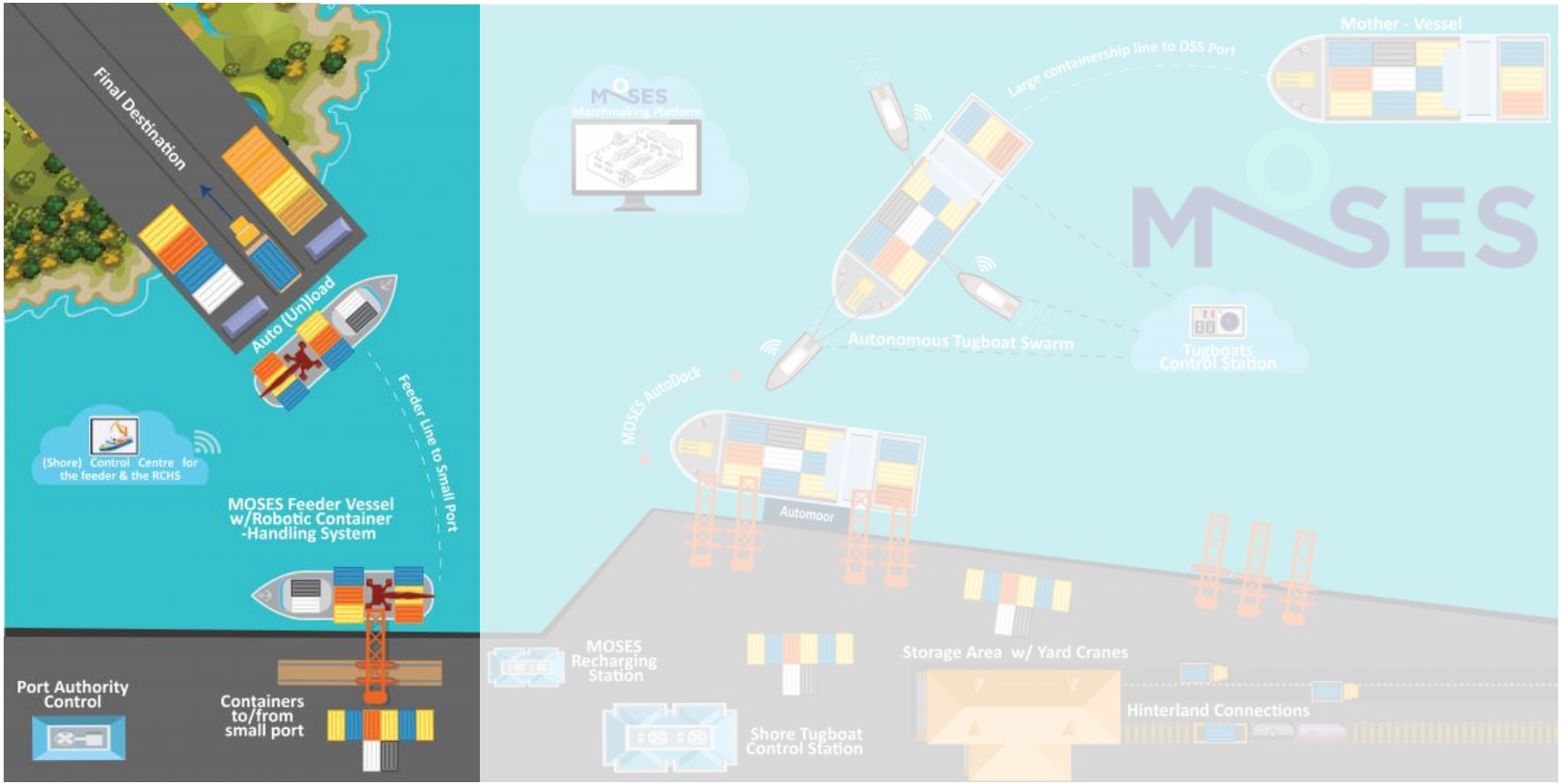

Introduction

Aim:

- autonomously sail from quay to quay

Approach:

- split operation
- guidance - navigation - control
- simulate

Split operation

Split operation

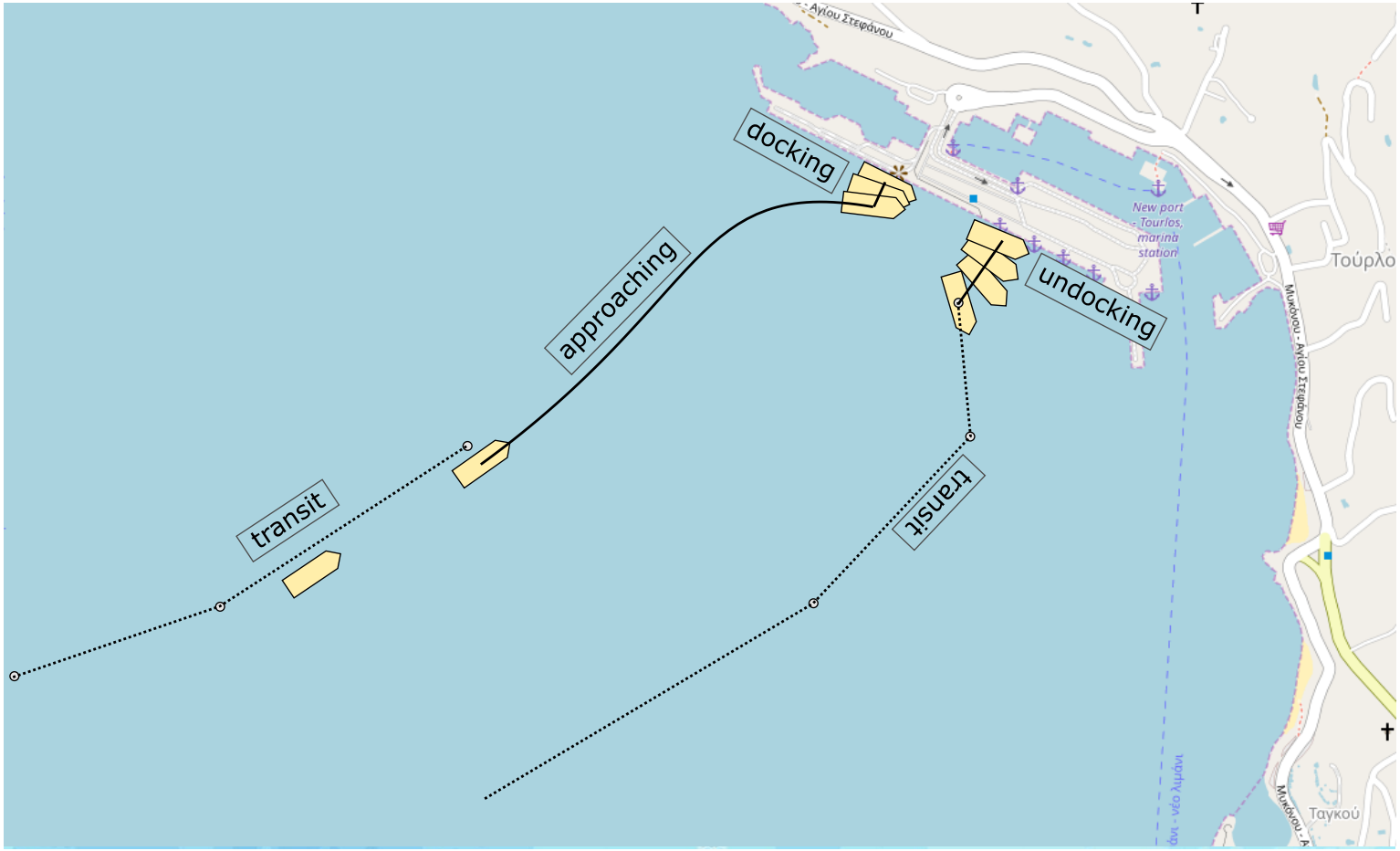

Approaching - GNC

Guidance - Navigation - Control framework

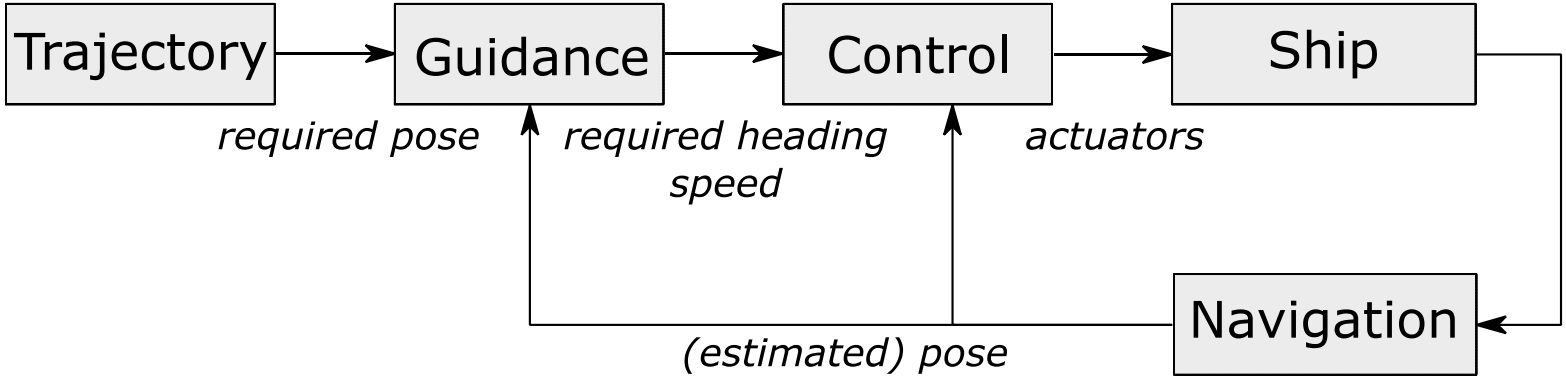

Approaching - GNC

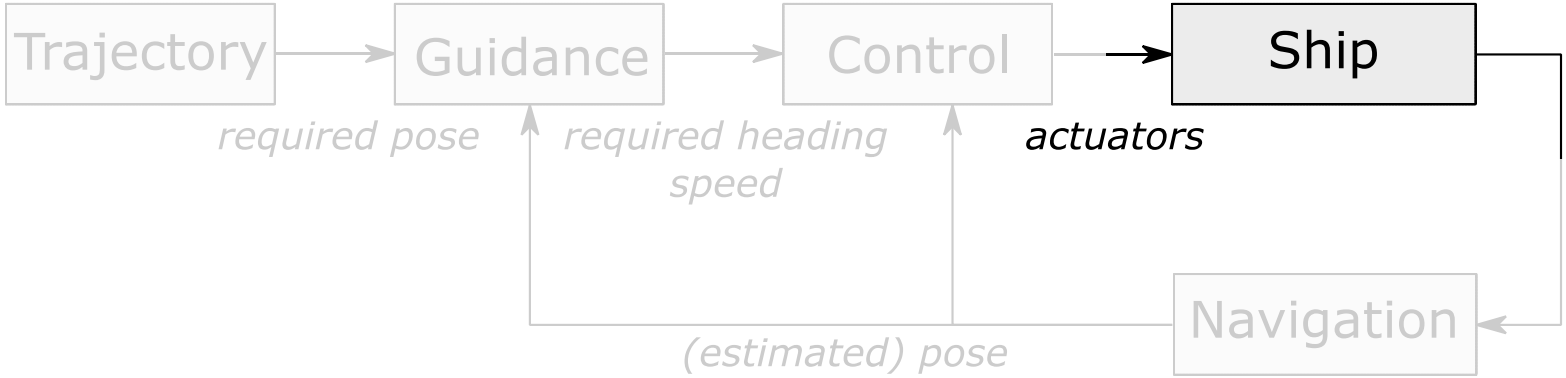

Ship model

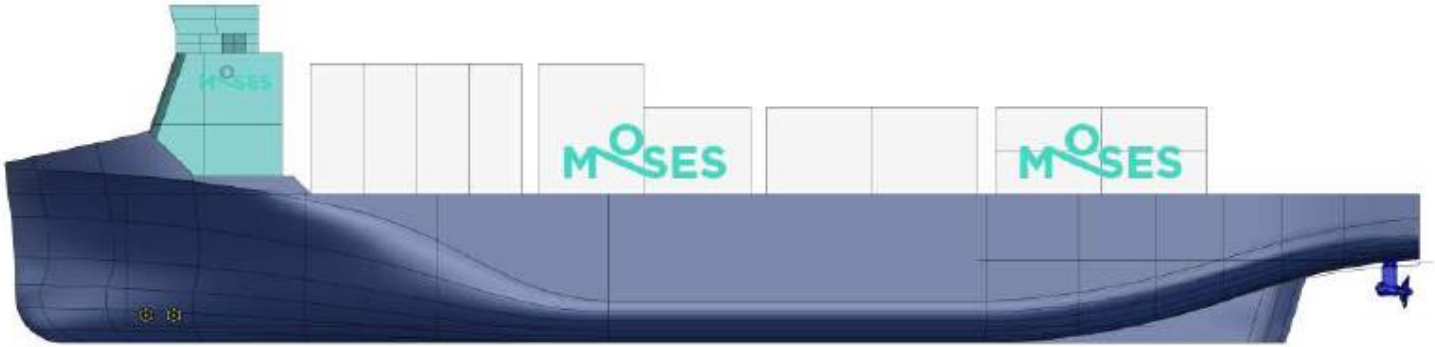

Lpp	71.0 m
B	13.0 m
t	4.5 m
∇	2.8 10^3 m^3
m	2.9 10^6 kg

- two azimuthing pods
- two bow thrusters
- course unstable ship

manoeuvring model from CFD calculations
→ available in time domain simulator

Approaching - GNC

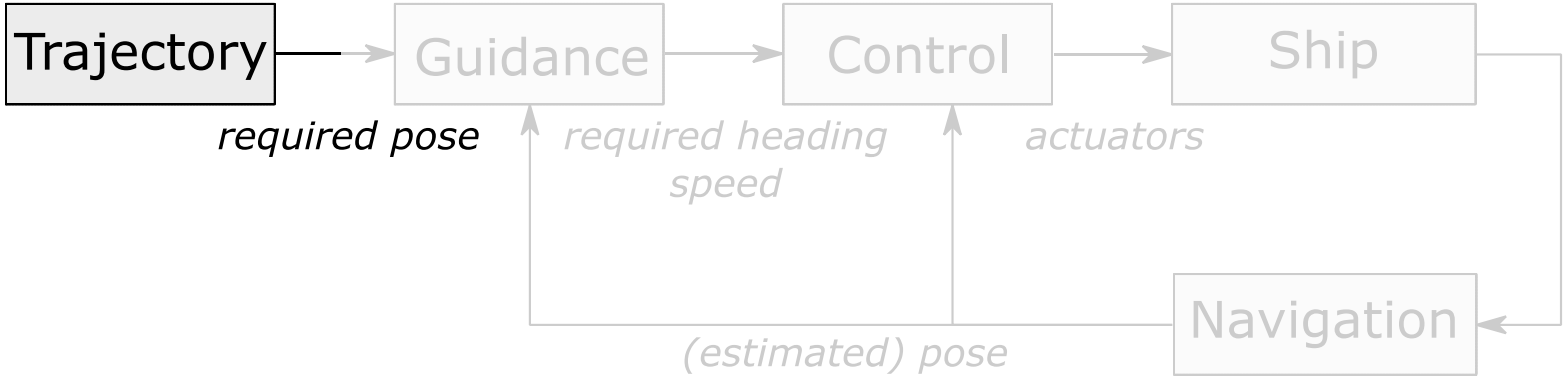

Approaching - Bézier trajectory

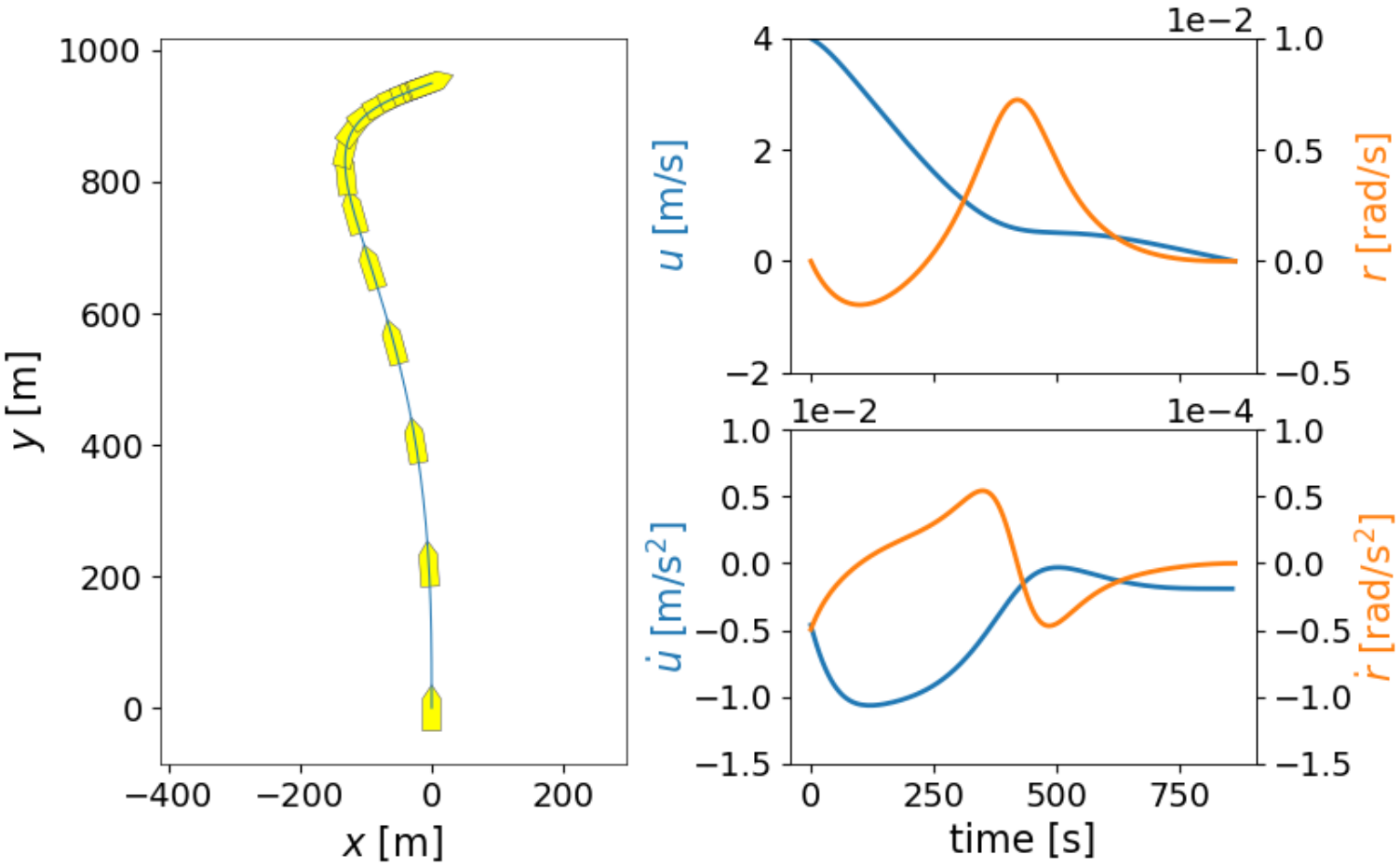

Approaching - Bézier trajectory

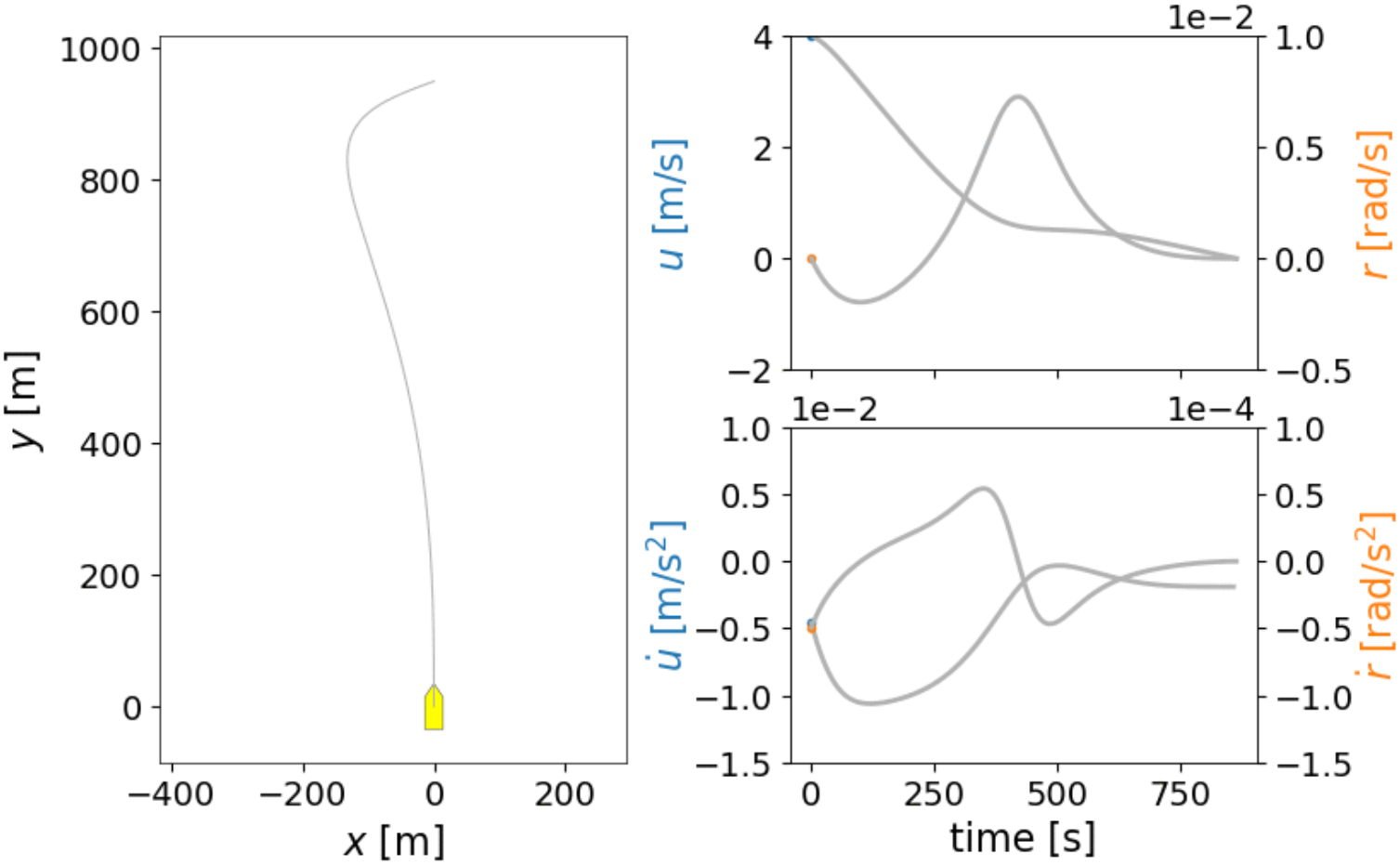

Approaching - GNC

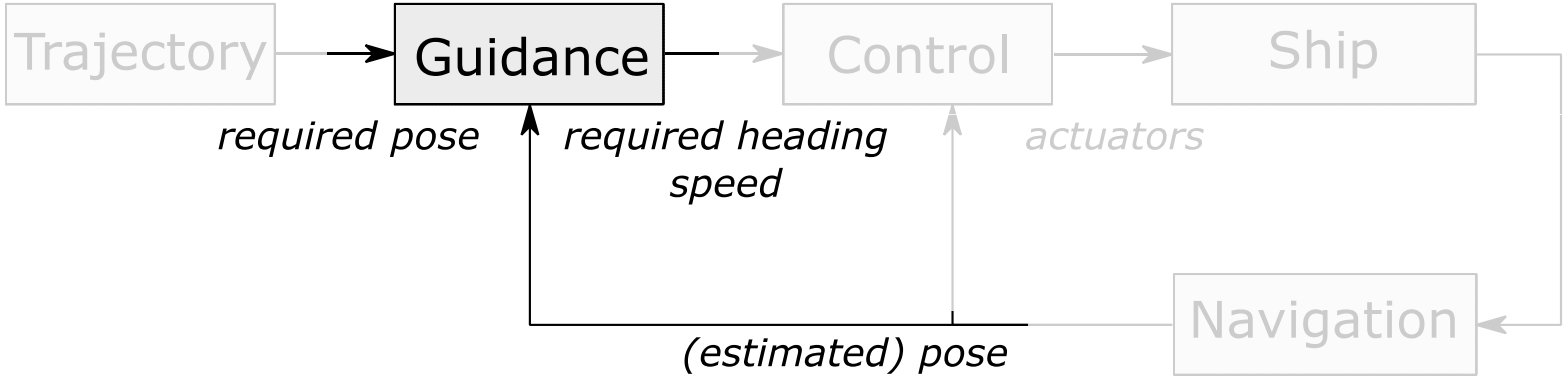

Approaching - guidance

Convert earth-fixed trajectory

→ to ship-fixed heading/speed

Constant bearing

- copies velocity vector of 'target': v_{sp}
- adds velocity vector to reach it: v_c

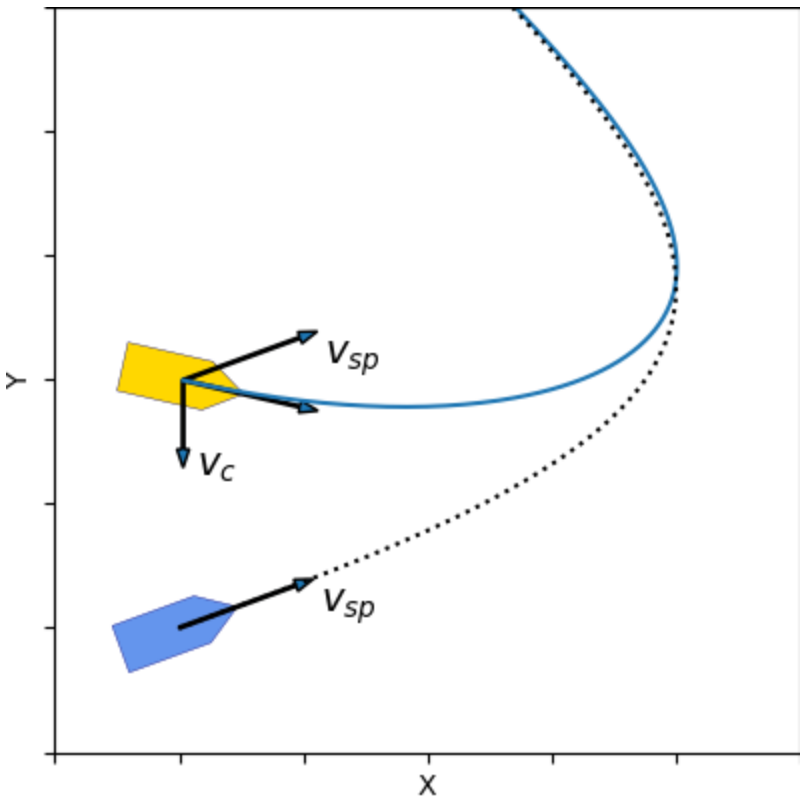

Approaching - guidance

Convert earth-fixed trajectory

→ to ship-fixed heading/speed

- Constant bearing
  - copies velocity vector of ‘target’
  - adds velocity vector to reach it

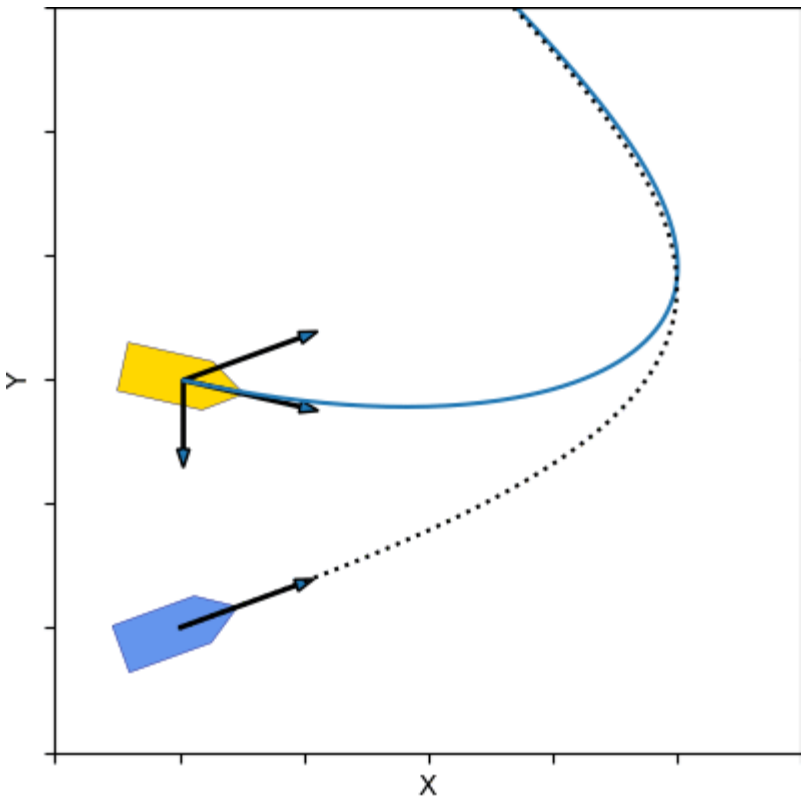

Approaching - GNC

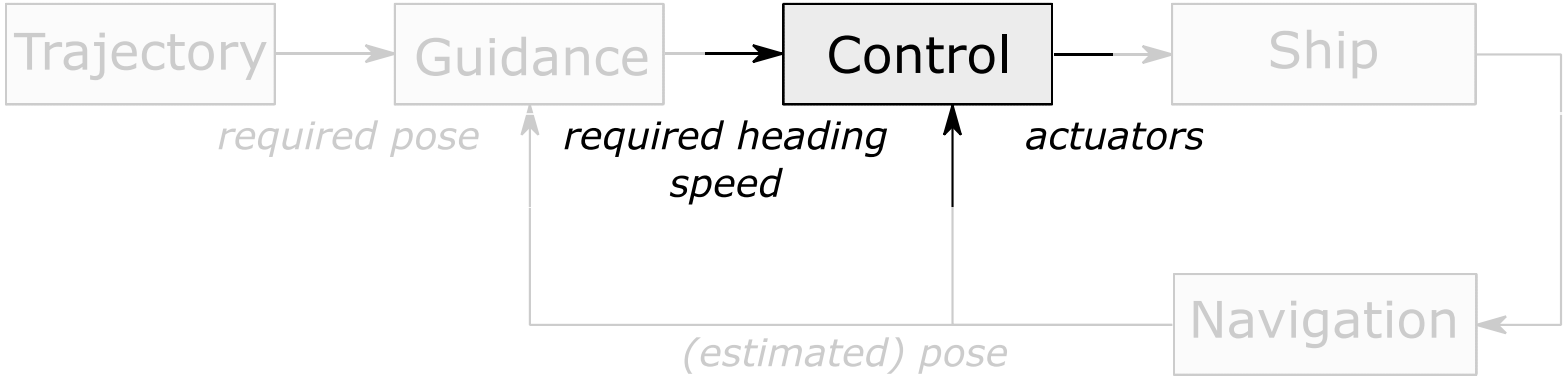

Approaching - control

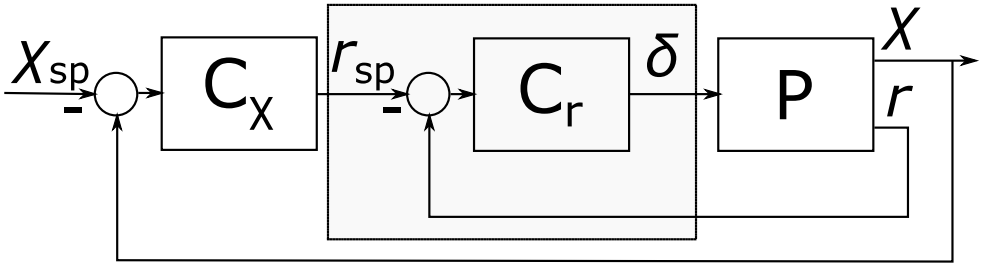

- Cascade control
  - inner loop: rate-of-turn
  - outer loop: course
- Stabilises unstable inner loop
- Counters fast disturbances in inner loop

Approaching - control

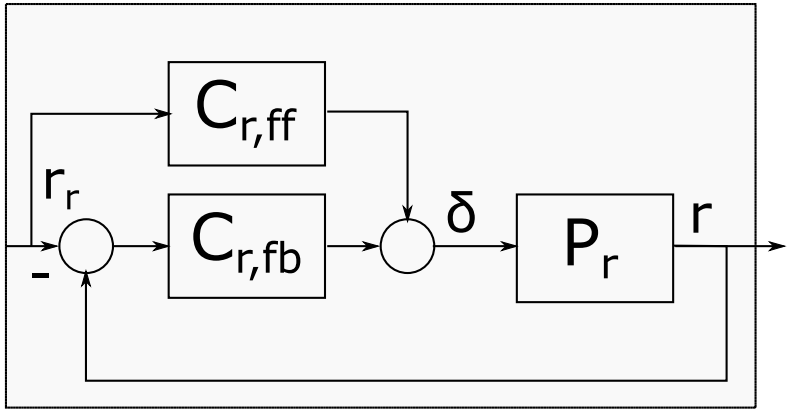

- Cascade control - inner loop
  - controls rudder to obtain rate-of-turn
  - feedback → counter disturbances / instability
  - feedforward → control what you know

Approaching - control

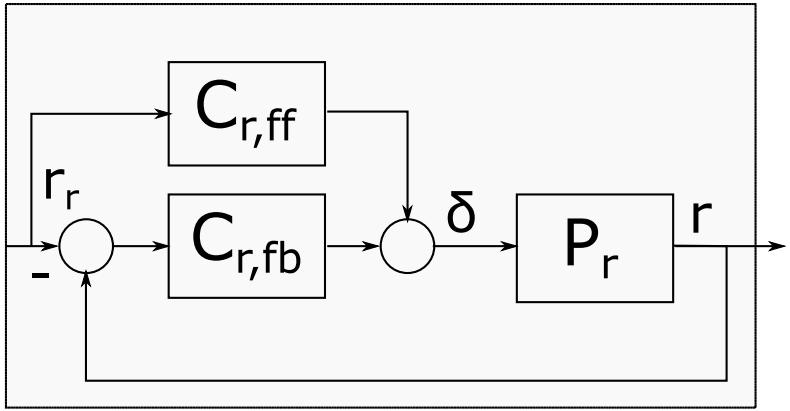

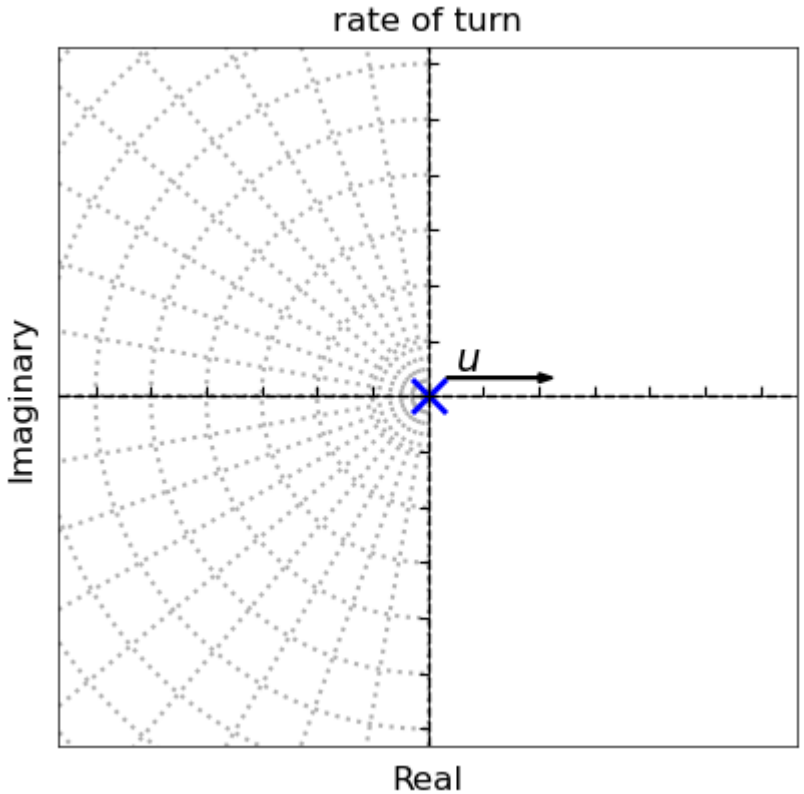

- Cascade control - inner loop
  - controls rudder to obtain rate-of-turn
  - feedback → counter disturbances / instability
  - feedforward → control what you know

Approaching - control

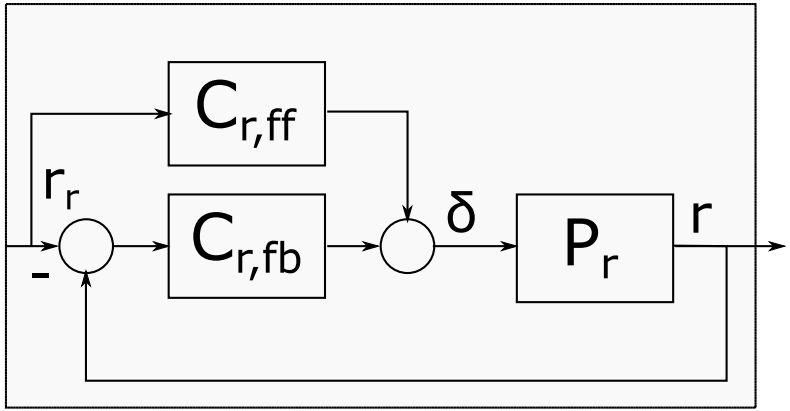

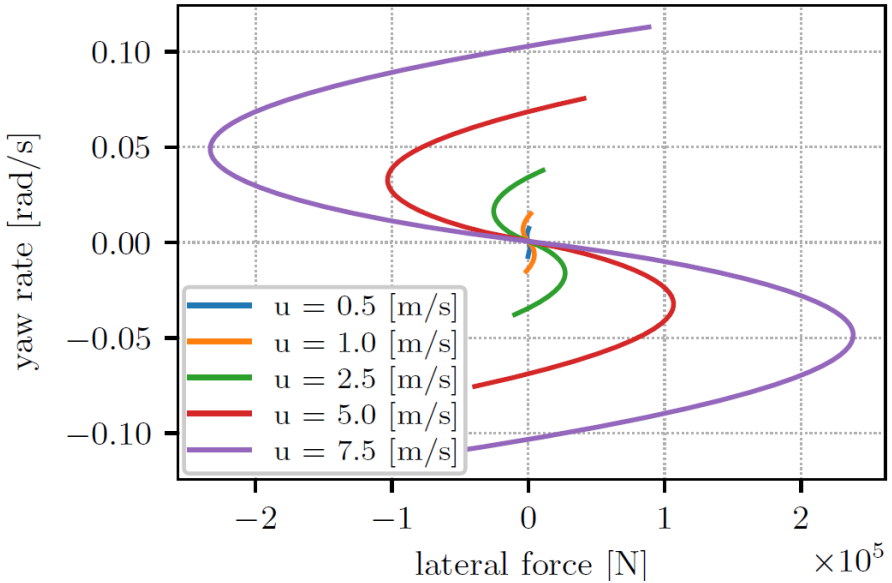

- Cascade control - inner loop
  - controls rudder to obtain rate-of-turn
  - feedback → counter disturbances / instability
  - feedforward → control what you know

Approaching - control

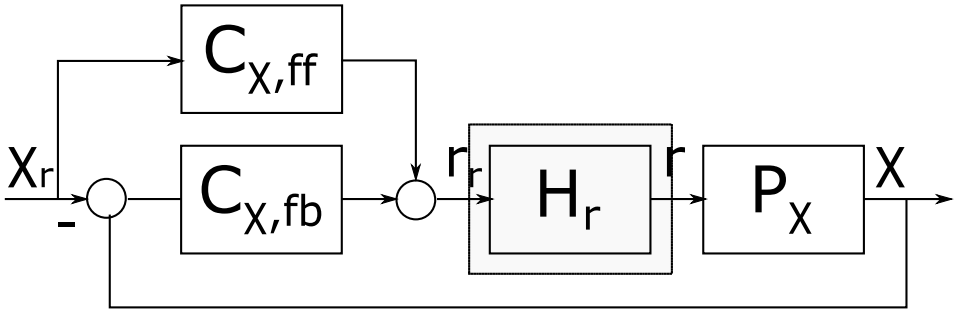

- Cascade control - outer loop
  - calculates required rate-of-turn to control course

Approaching - control

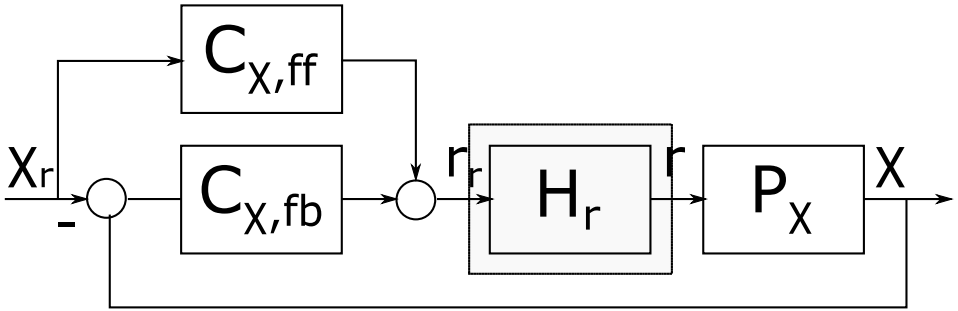

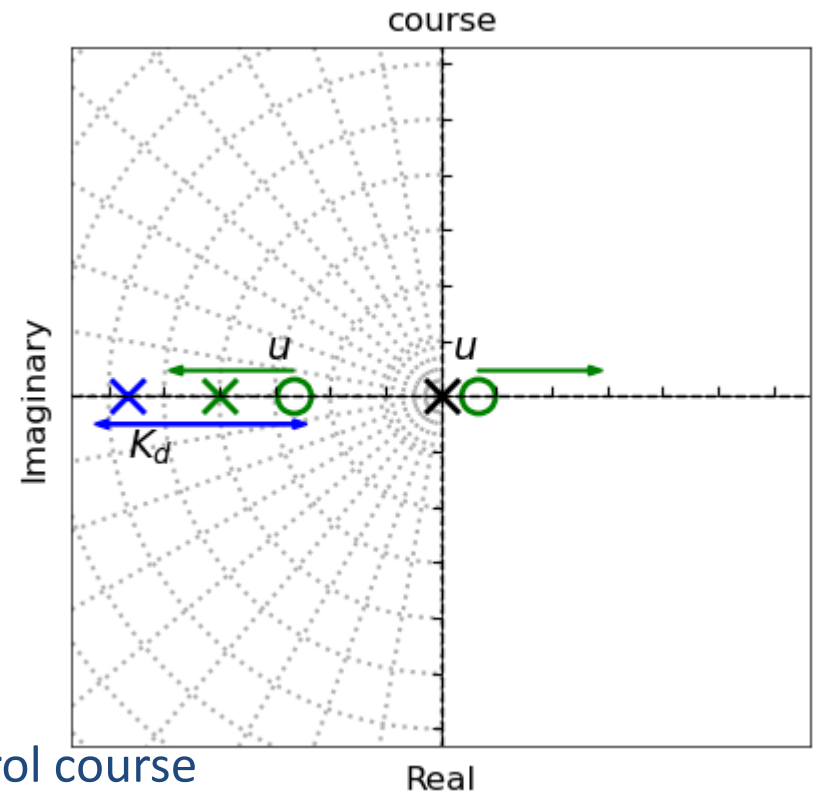

- Cascade control - outer loop
  - calculates required rate-of-turn to control course
  - pole-zero cancellation at yaw/course conversion

Approaching - control

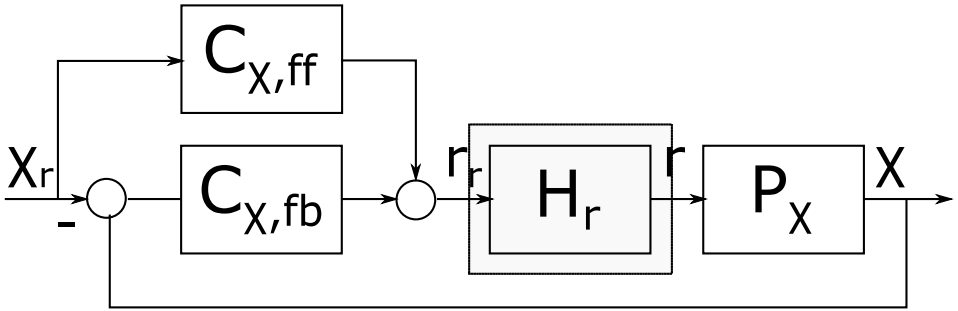

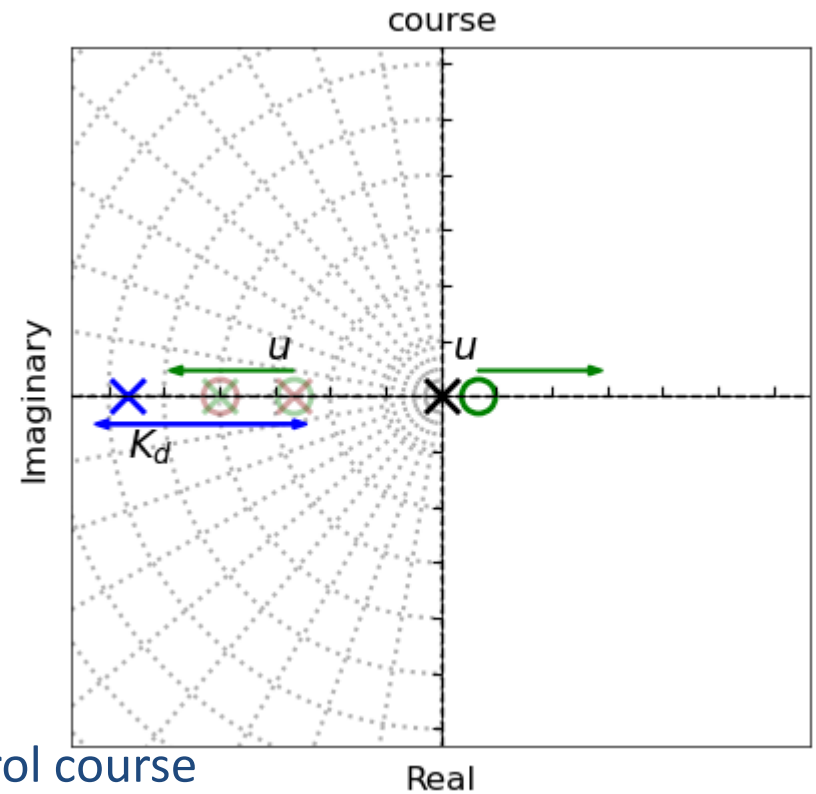

- Cascade control - outer loop
  - calculates required rate-of-turn to control course
  - pole-zero cancellation at yaw/course conversion
  - pole placement for rest

Approaching - control

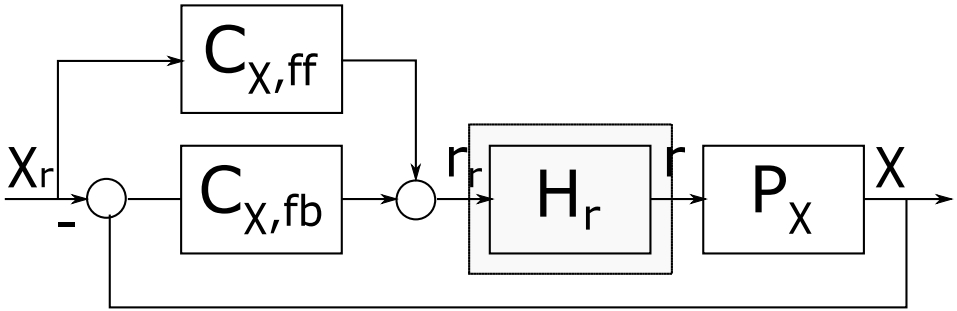

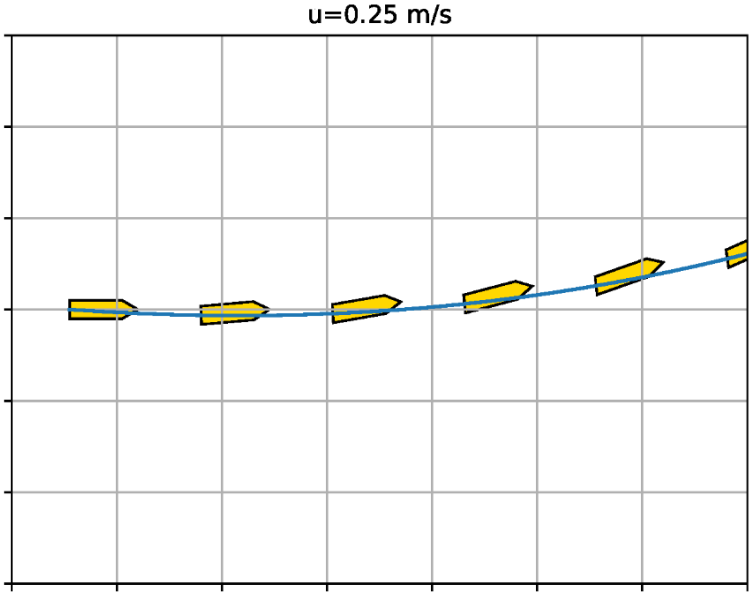

- Cascade control - outer loop
  - calculates required rate-of-turn to control course
  - pole-zero cancellation at yaw/course conversion
  - pole placement for rest

Approaching - control

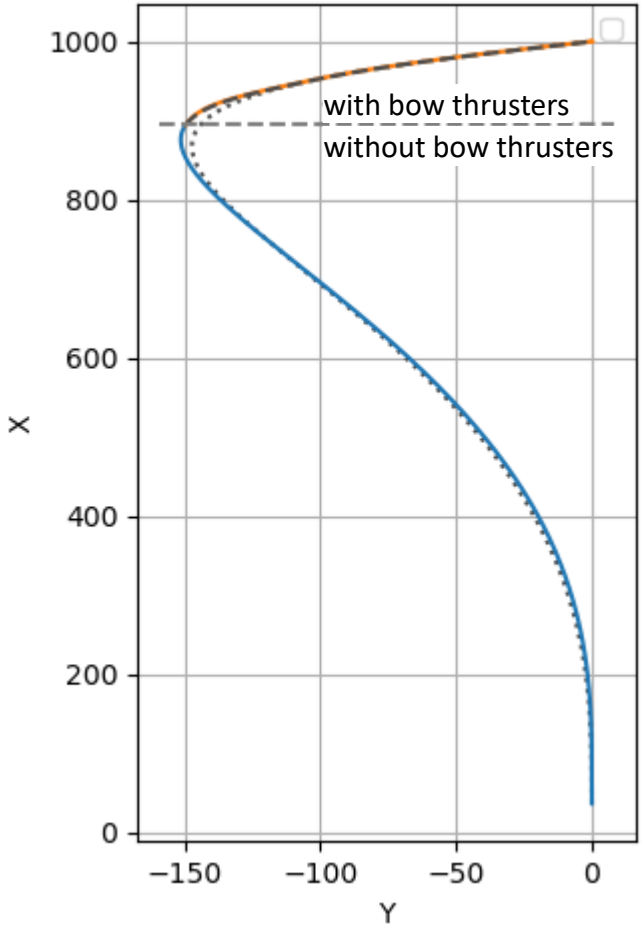

- blue: measurement no bow thrusters
- orange: measurements with bow thrusters
- dotted: trajectory required

Approaching - control

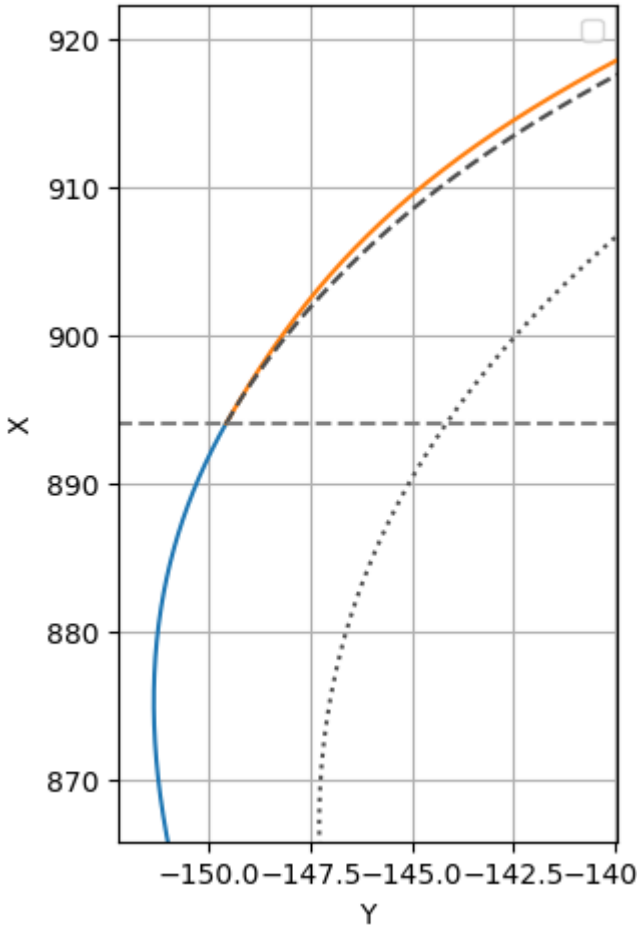

- blue: measurement no bow thrusters
- orange: measurements with bow thrusters
- dotted: trajectory required
- dashed: replanned

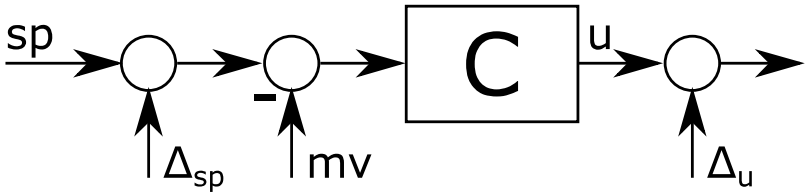

Simulate

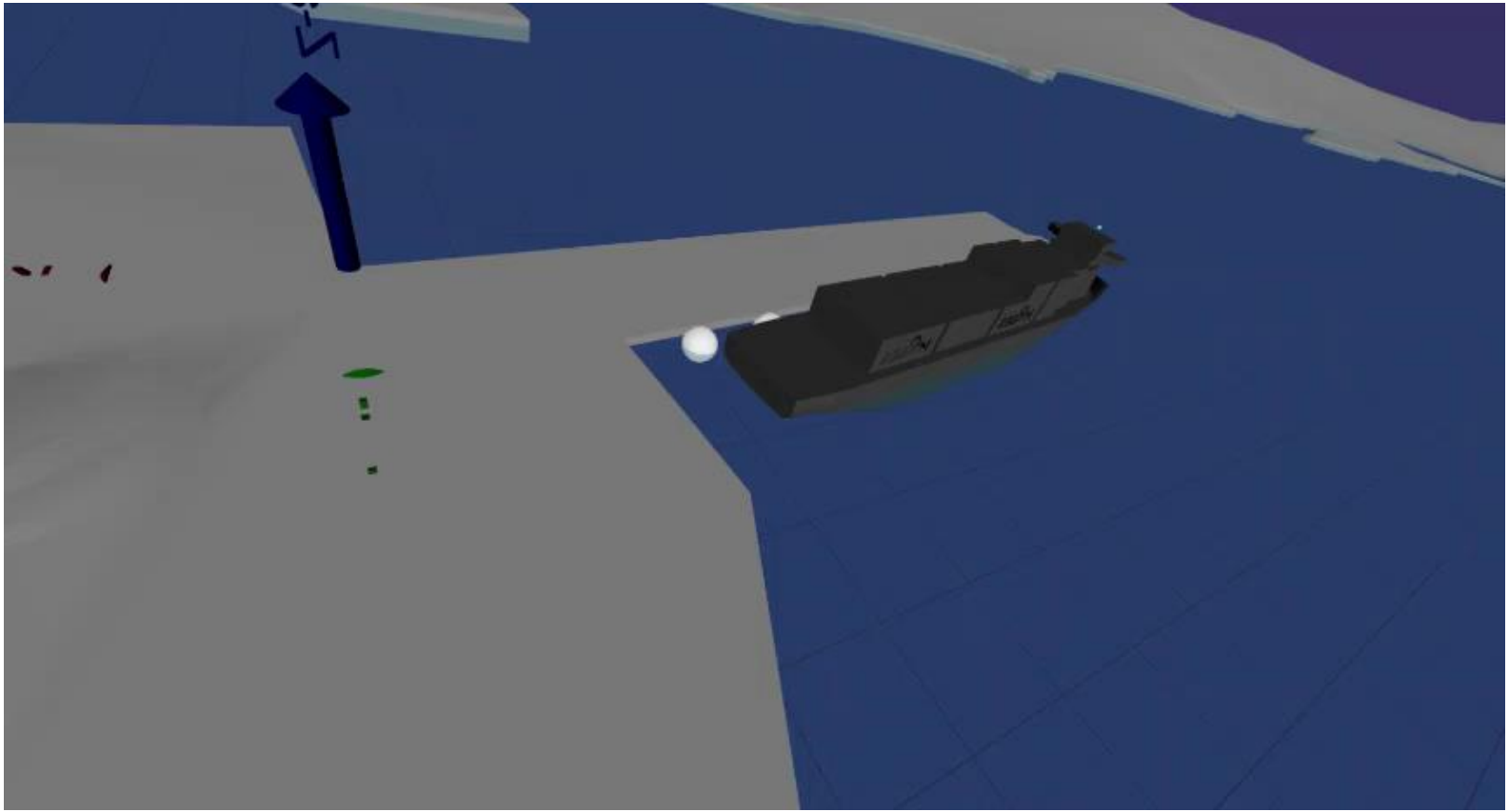

Summary

- controller designed and tested
  - cascade control for course control
  - course unstable ship
  - bow thrusters included at low speed
- divide-and-conquer approach for quay-to-quay operation
- guidance-navigation-control framework used

Acknowledgment:

MOSES project has received funding from the European Union's Horizon 2020 research & innovation programme under grant agreement No. 861678. Content reflects only the authors' view and the Agency is not responsible for any use that may be made of the information it contains.